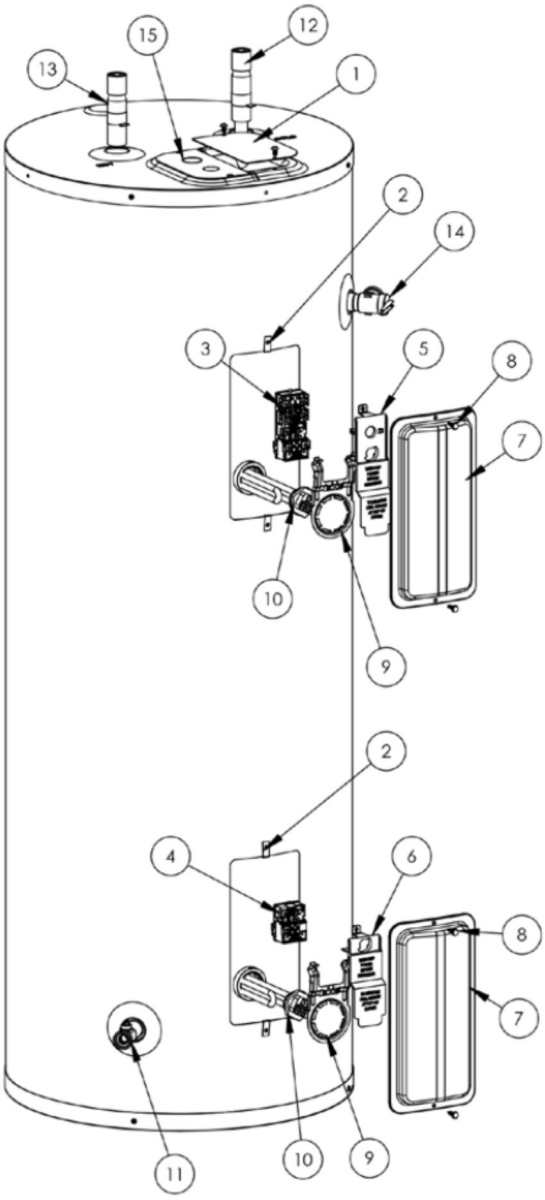

ITEM#	DESCRIPTION	PART #
1	JUNCTION BOX COVER (w/SCREWS)	6060P-983
2	CLIP-ON NUT	7450P-016
3	THERMOSTAT - UPPER	6060P-1008
	THERMOSTAT - UPPER ("U" MODELS ONLY)	6060P-001
4	THERMOSTAT - LOWER	6060P-1009
	THERMOSTAT LOWER ("U" MODELS ONLY)	6060P-002
5	THERMOSTAT PROTECTIVE COVER -UPPER	6060P-994
	THERMOSTAT PROTECTIVE COVER -UPPER (U-MODELS ONLY)	6060P-634
6	THERMOSTAT PROTECTIVE COVER-LOWER	6060P-952
	THERMOSTAT PROTECTIVE COVER-LOWER (U-MODELS ONLY)	6060P-636
7	ACCESS PANEL	6060P-187
8	SCREWS - ACCESS PANEL	6075P-006
9	MOUNTING BRACKET	6060P-955
	MOUNTING BRACKET ("U" models only)	6060P-956
10	ELECTRIC ELEMENT - 3000W	6060P-939
	ELECTRIC ELEMENT - 4500W	6060P-938
	ELECTRIC ELEMENT - 5500W	6060P-937
11	DRAIN VALVE	6070P-009
12	DIP TUBE - 40 GAL DIP TUBE - 52 GAL.	6060P-1034 6060P-1035
13	NIPPLE/HEAT TRAP	6060P-1038
14	TEMP/PRESSURE RELIEF VALVE	TP1700
15	JUNCTION BOX COVER W/ KNOCKOUTS (W/SCREWS)	6060P-982

PARTS FOR UNITS WITH BOLT-ON T-STAT BRACKETS ONLY-NOT SHOWN

16	THERMOSTAT MOUNTING BRACKET-BOLT-ON	6060P-633
17	SPACER	6060P-979
18	NUTS	6060P-935
19	ELEMENT PROTECTIVE COVER	6060P-997

WHL-026-A
12/06/16

Figure 9 - Replacement Parts - Staged Operation